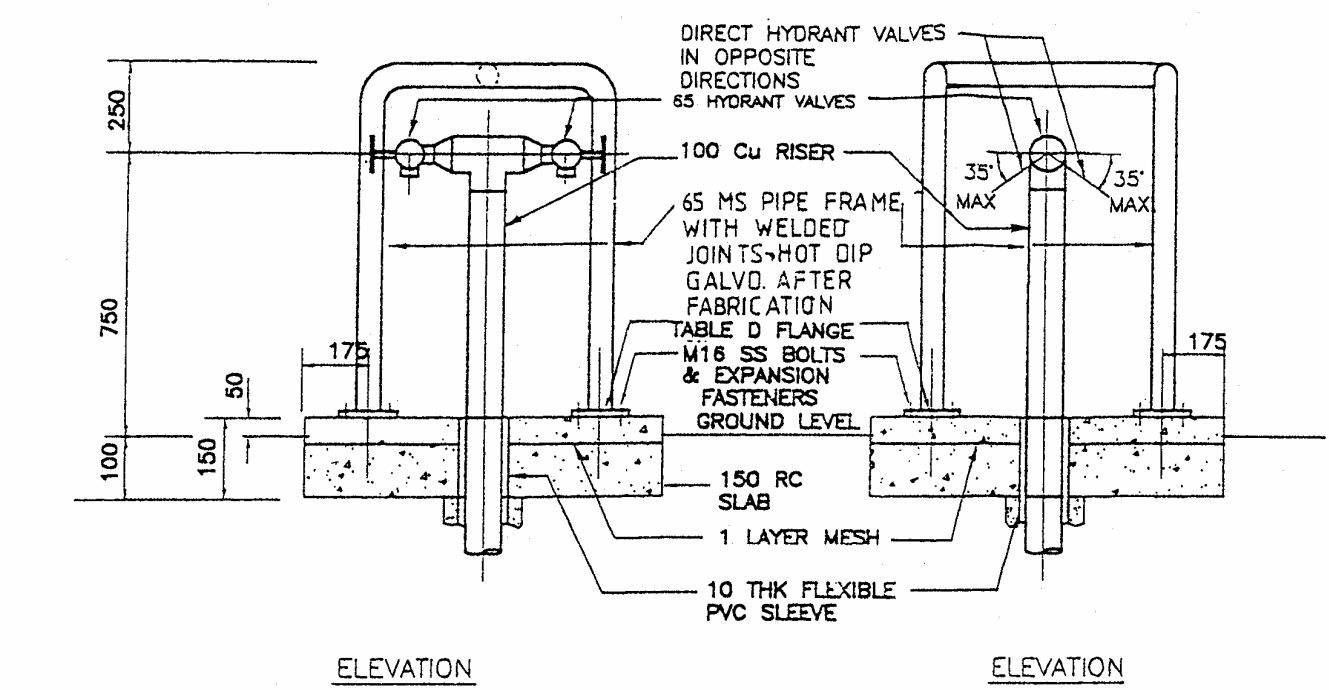

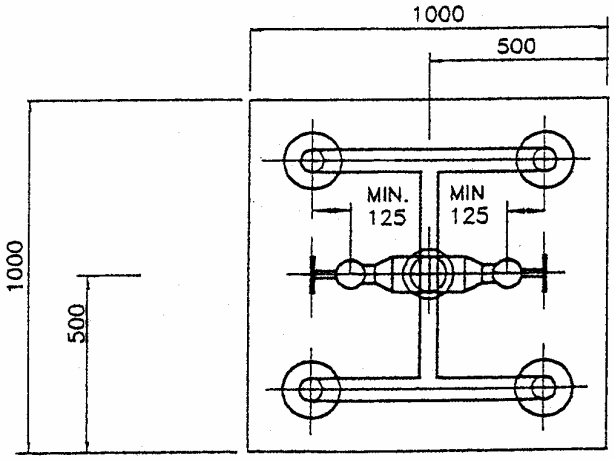

✳ PAINT FINISH AS SPECIFIED